Series CS-10 Steam-to-Steam Humidifier

Consists of the humidifier, control valve, inverted bucket steam trap, strainer, dispersion tube(s), control panel (if available) and optional humidistat.

Figure 98-1. Model CS-11SF Humidifier

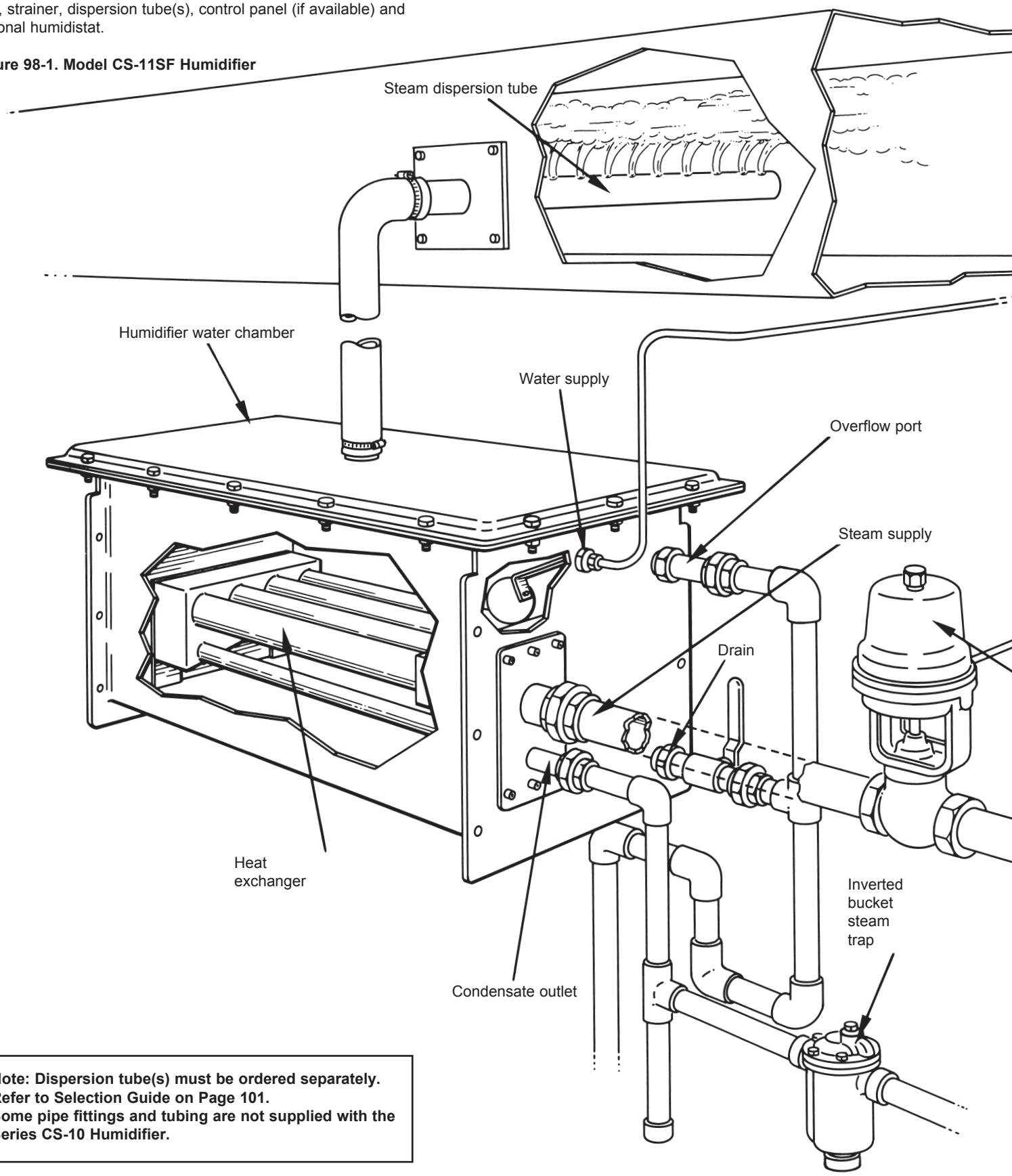

Note: Dispersion tube(s) must be ordered separately. Refer to Selection Guide on Page 101.
Some pipe fittings and tubing are not supplied with the Series CS-10 Humidifier.

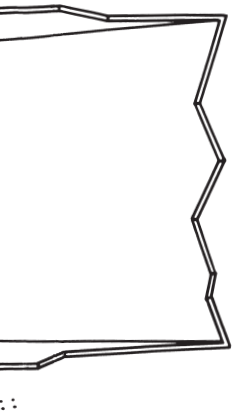

Ionic Beds
The use of Ionic Beds in the CS-10 Series will reduce the amount of maintenance, and improve the overall performance of the unit. With the beds in the tank, the scale will build up on the media and reduce the amount of scale on the heat exchanger. This provides a longer heat exchanger life, and a more efficient heat transfer. Ionic beds are not available in all models. See Page 100.

Heavy Duty Construction
of the humidifier chamber, heat exchanger, float mechanism, and duct dispersion tube make the unit rugged and corrosion resistant.

In-line Strainer
with no-crush screen removes most of steam particulate matter.

ACV Series Control Valve
controls the steam flow to the heat exchanger. This valve uses Armstrong's 3/4" stroke, parabolic plug valve design with years of proven field performance. The valve is available for pneumatic, electric or electronic control signals. Reference Table 85-1, Page 85.

Reliable Cast Iron Inverted Bucket Steam Trap
provides dependable drainage because it has only two moving parts and not fixed pivots or complicated linkage to stick, bind or clog.

Safety Features
protect against damage in event of failure. The control valve is designed to fail closed, and the humidifier's water chamber overflow port will protect the unit from over-filling in case of level control failure.

Simplified Cleaning
is facilitated by a removable lid that provides easy access to the heat exchanger for removal of accumulated solids. Optional Teflon coated or phenolic coated heat exchangers are available to further aid in cleaning.

Electronic Control Panel
includes an electronic level control module and terminals for incoming control wiring. Field proven conductance actuated level control probes are used for reliable control of the humidifier's fill and drain valves.

Maintenance
of the Series CS-10, to assure efficient operation of the unit, is important. The production of steam from ordinary tap water will result in solids remaining in the chamber, particularly in models without ionic beds. Periodic cleaning of the chamber and heat exchanger will be necessary. Use of softened or purified water will lessen or eliminate need for cleaning.

If maintenance is a concern, Armstrong offers other solutions.

Series 9000 and 1000 Humidifiers are the most reliable, carefree direct-injection humidifiers available. They can be supplied with steam from a central boiler or if boiler water treatment carryover is a concern, can be supplied from a separate dedicated boiler using untreated tap water or an unfired steam boiler.

EHU and HumidiClean Electric Humidifiers are self-generating units, which produce humidifying steam from ordinary tap water.

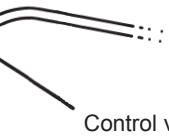

Control valve

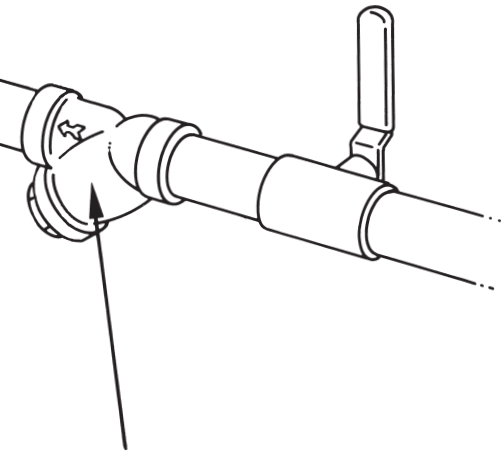

In-line strainer

Figure 99-1. Ionic Beds
Ionic beds are used in Models CS-13CB, CS-14CB, CS-14SB, CS-15CB and CS-15SB.

shopvalves.com

Series CS-10 Humidifier for Chemical-Free Steam

Humidification with Revolutionary Ionic Bed Technology

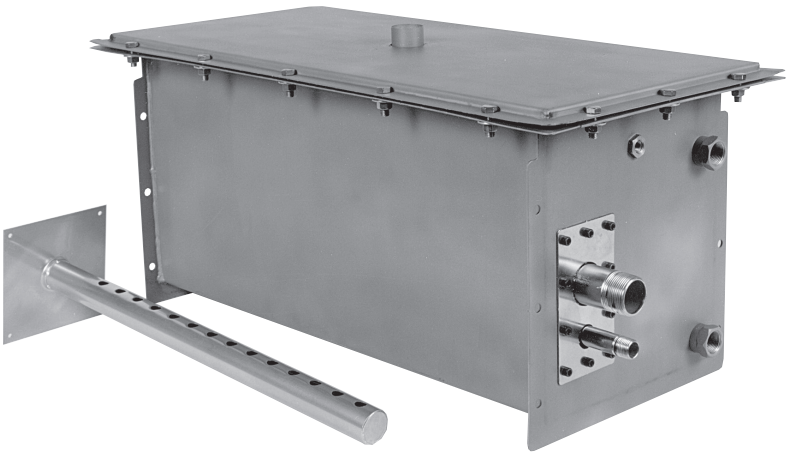

If you have a concern . . . We Have a Solution

For those who are concerned about the effects of water-treatment chemicals in the discharge of humidifying steam, Armstrong offers the Series CS-10 Humidifier.

Chemical Free, Economical Steam From Untreated Water

The Series CS-10 is a steam-to-steam device which uses existing boiler steam to produce clean steam from untreated water. Because the Series CS-10 uses steam from a central boiler as its heat source, the humidifying steam can be produced more economically than from electricity.

The Series CS-10 consists of a heat exchanger submersed in a tank of water. The heat of the steam supplied to the heat exchanger raises the temperature of the tank water to the boiling point, converting the water to steam which is then injected into an air handling system. The result gives all the benefits of steam humidification without the concern for boiler water treatment carryover.

Armstrong, with 60 plus years of experience since inventing the first steam humidifier, has a model to meet every need… to fit every circumstance. The Series CS-10 will meet the needs of facilities requiring the proven benefits of direct-injected steam humidification without the concern for potentially harmful airborne contaminants.

It may be just the solution for your sensitive environment!

Steam Humidification

Many benefits are derived from humidifying work spaces. Proper levels of relative humidity are vital to the preservation of hygroscopic materials such as paper, wood and textiles; to the prevention of electrostatic discharge; to the comfort of workers.

Steam is the recommended medium for humidification. “If the system requires humidification, the humidification process should be limited to the direct injection of steam” (National Research Council, 1987).

When steam for direct-injection humidification is taken from a central boiler it may contain vaporized amines, used to protect boiler and steam system components from corrosion. Testing has shown that carefully administered boiler treatment programs maintain levels of amine in humidified air well within guidelines suggested by OSHA, the ACGIH, and the FDA. There remain some concerns, however, about the effects of volatile, neutralizing amines in steam systems supplying humidifiers. It must be pointed out that the concerns are about the amines themselves, not steam humidification.

Ionic Beds Stop Solids

Ionic beds consist of a fibrous medium that attracts solids from the water as its temperature rises, minimizing the build-up of solids on the heat exchanger and inner tank walls. Once ionic beds have absorbed their capacity of solids, an indicator on the humidifier’s control panel signals it’s time to replace the ionic beds. Changing the beds takes only about 15 minutes. Use of the ionic beds:

- Reduces cleaning of tank exchanger or heating elements
- Keeps the drain screen cleaner longer - allowing effective tank blowdown
- Helps maintain humidifier output without building excessive heat exchanger surface temperatures
- Requires less frequent blowdown, conserving water and energy
- Eliminates the need for wasteful surface skimmers that must be checked weekly for possible plugging
- Reduces downtime
- Offers years of field-proven success in thousands of humidifier applications

Better Here Than in Your Humidifiers

These photos show how the ionic bed fibers (magnified 52.5x) collect solids throughout their service life. A new ionic bed weighs between 1/3 and 1/2 pound, depending on the humidifier type. When it reaches its capacity, an ionic bed may weigh more than 2-1/2 pounds.

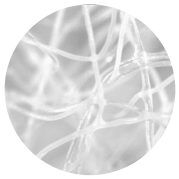

New Ionic Bed

After 400 hours

After 800 hours

*Designs, materials, weights and performance ratings are approximate and subject to change without notice. Visit **armstrong**international.com for up-to-date information.*

Armstrong International - NA
armstronginternational.com

Armstrong International - EU
armstronginternational.eu

Armstrong International - China
armstronginternational.cn

Armstrong International - India
armstronginternational.in

Armstrong International, Korea
armintl.co.kr

NEXT

shopvalves.com

Capacities and Physical Data

Armstrong®

Table 101-1. Continuous Discharge Capacities in Pounds of Steam Per Hour

Inlet Steam Pressure (psig)	Model Number									
	CS-11SB/DI	CS-11CB	CS-12SB/DI	CS-13SB/DI	CS-13CB	CS-14SB/DI	CS-14CB	CS-15SB/DI	CS-15CB	CS-16CB
2	2	—	4	5	—	—	—	—	—	—
5	10	30	30	50	50	75	100	**115**	**200**	**300**
10	30	65	80	100	175	135	280	**270**	**560**	**800**
13	33	92	105	150	210	210	350	**420**	**700**	**1118**
15	35	110	120	180	240	260	400	**520**	**800**	**1330**

Capacities based on steam pressure entering control valve.

Table 101-2. List of Materials

Series	CS-10SB	CS-10SF	CS-10DI	CS-10CB	CS-10CF
Chamber and Lid	T304 SS				
Heat Exchanger	T304 SS (T316 Optional)			Electroless Nickel Plated Copper	
Chamber Gasket	SI (Silicone)				
Control Panel (Not Shown)	NEMA 4	NONE		NEMA 4	NONE
Ionic Bed Material*	Proprietary				
Float Mechanism Less Valve	N/A	T304 SS		N/A	T304 SS
Float Mechanism Valve Only	N/A	Viton		N/A	Viton
Level Control Electrodes	18-8 SS & Teflon	N/A		18-8 SS & Teflon	N/A
Dispersion Tube	T304 SS				
Hose Cuff	EPDM				
Gasket Inlet / Outlet	NBR (Buna - N)				
Chamber Cap Screws & Nuts	18-8 SS				
Inverted Bucket Steam Trap	ASTM A48 CL. 30 w/ 18-8 SS				
Control Valve	To Be Specified				
Strainer	ASTM A48 CL. 30 w/ T304 SS Screen				

*Ionic beds are used in Models CS-13CB, CS-14CB, CS-14SB, CS-15CB and CS-15SB.

Table 101-3. Selecting Proper Steam Dispersion Tube

Steam Dispersion Tube Model No.		Steam Dispersion Tube Length		Duct Width				Weight	
				Min		Max.			
CS-11	CS-12, CS-13, CS-14, CS-15	in	mm	in	mm	in	mm	lb	kg
D-1	DL-1	12	30	11	28	16	41	3	1.4
D-1.5	DL-1.5	18	46	17	43	22	56	3	1.4
D-2	DL-2	24	61	23	58	34	86	4	2
D-3	DL-3	36	91	35	89	46	117	6	3
D-4	DL-4	48	122	47	119	58	147	8	3.6
D-5	DL-5	60	152	59	150	70	178	9	4
D-6	DL-6	72	183	71	180	82	208	10	4.5
D-7	DL-7	84	213	83	211	94	239	11	5
D-8	DL-8	96	244	95	241	106	269	12	5.5
D-9	DL-9	108	274	107	272	118	300	13	6
D-10	DL-10	120	305	119	302	130	330	14	6.4

Notes:

When unit has maximum capacity of **greater than** 40 lb/hr, use steam dispersion tube with 1/2" drain.

Models CS-12 and CS-13 require a minimum of two DL dispersion tubes each.

Model CS-14 requires a minimum of two dispersion tubes for capacities **less than** 180 lb/hr. **Greater than** 180 lb/hr requires four dispersion tubes (minimum) or Armstrong HumidiPack.

Model CS-15 may be used with four dispersion tubes (minimum) for capacities **less than** 360 lb/hr. For capacities **greater than** 360 lb/hr, an Armstrong HumidiPack is suggested.

Physical Data, continued…

Figure 102-1. Model CS-11

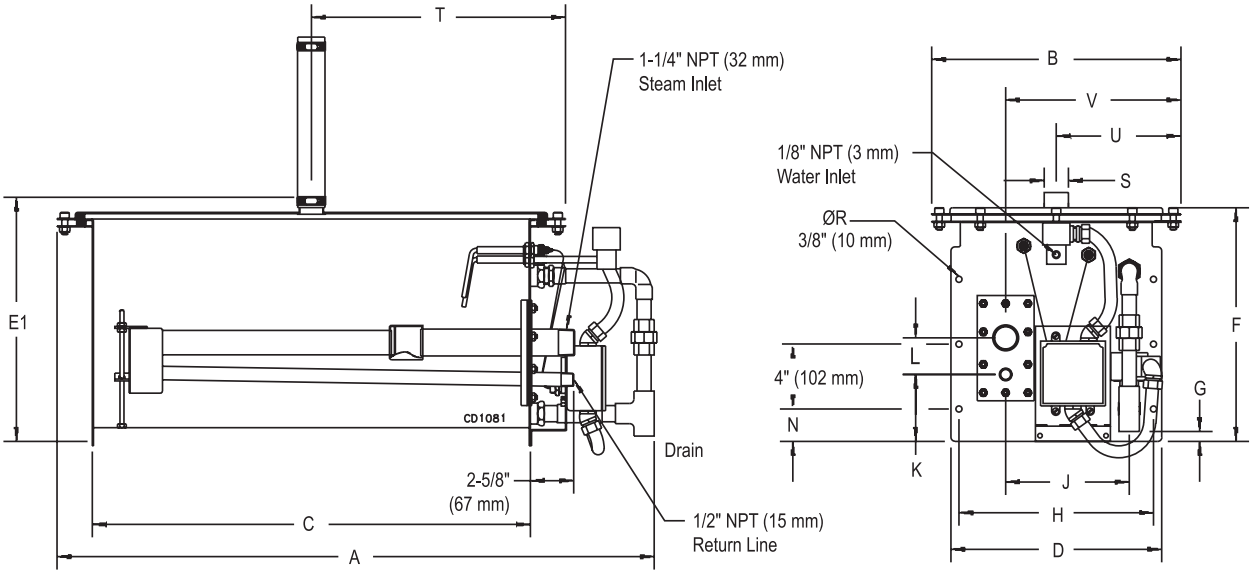

Table 102-1. Dimensions

Item	Description	CS-11		CS-12		CS-13		CS-14		CS-15		CS-16	
		in	mm	in	mm	in	mm	in	mm	in	mm	in	mm
A	Length (overall)	36	913	50-3/4	1289	50-3/4	1289	45-1/2	1156	45-1/2	1156	54-3/4	1391
B	Width (overall)	13-3/16	340	19-1/4	489	19-1/4	489	22	559	41-3/4	1060	41-3/4	1060
C	Length from Bottom of Tank	27-1/4	692	42	1067	42	1067	38-1/4	972	38-1/4	972	47-1/2	1207
D	Tank Width	13	330	18-7/8	479	18-7/8	479	23	584	43	1092	43	1092
E	Tank Bottom to Steam Outlet (4" Flange)	—		22-3/4	578	22-3/4	578	31-3/8	797	31-3/8	797	31-3/8	797
E1	Tank Bottom to Steam Outlet	22-7/8	580	22-3/4	578	22-3/4	578	31-11/16	805	31-11/16	805	31-11/16	805
F	Tank Bottom to Top of Lid	17-5/8	448	17-1/2	445	14-11/32	36	26-9/16	675	26-9/16	675	26-9/16	675
G	Drain to Tank Bottom	15/16	23	15/16	24	15/16	24	—		—		—	
H	Width ℄ Tank Flange Holes	12-1/4	311	18	457	18	457	22	559	41-3/4	1060	41-3/4	1060
J	℄ of Drain to ℄ Condensate Outlet	7-3/4	197	13-5/8	346	13-5/8	346	8-5/8	219	8-5/8	219	8-5/8	219
K	℄ Return Line to Tank Bottom	4-3/32	104	3-1/32	77	3-1/32	77	5-3/8	137	5-3/8	137	5-3/8	137
L	℄ Return Line to ℄ Steam Inlet	3-1/2	89	3-19/32	91	3-19/32	91	9-11/32	237	9-11/32	237	9-11/32	237
M	℄ Steam Outlet to Edge of Lid	—		6-11/16	170	6-11/16	170	5-1/2	140	5-1/2	140	5-1/2	140
N	Tank Bottom to 1st Flange Hole	1-3/16	33	1-5/16	33	1-5/16	33	7	178	7	178	7	178
R	No. of Tank Flange Holes (Both Ends)	12 holes											
S	Diameter of Steam Outlet	2-3/8	60	4" (100 mm) Raised Face Flange									
				2-3/8	60	2-3/8	60	2-3/8	60	2-3/8	60	2-3/8	60
T	℄ Steam Outlet to End of Lid	14-5/8	372	22-1/16	560	22-1/16	560	20-1/8	511	20-1/8	511	24	610
U	℄ Steam Outlet to Edge of lid	6-11/16	169	9-5/8	244	9-5/8	244	11	279	11	279	11	279
V	℄ Return Line to Tank Flange	9-7/8	250	15-3/4	400	15-3/4	400	7-3/16	183	7-3/16	183	7-3/16	183
Maximum Operating - lb (kg)		183 (83)		398 (181)		413 (188)		920 (417)		1500 (680)		1500 (680)	
Shipping Weight - lb (kg)		85 (39)		160 (73)		160 (73)		400 (180)		780 (354)		780 (354)	

*Designs, materials, weights and performance ratings are approximate and subject to change without notice. Visit **armstrong**international.com for up-to-date information.*

Armstrong International - NA **armstrong**international.com
Armstrong International - EU **armstrong**international.eu
Armstrong International - China **armstrong**international.cn
Armstrong International - India **armstrong**international.in
Armstrong International, Korea armintl.co.kr

NEXT

Figure 103-1. Model CS-12/13

Alternate Lids:
CS-12/13 with 2 or 3 Steam Outlets

Model CS-12/13 Shown with Single 4" (100 mm) Flanged Steam Outlet

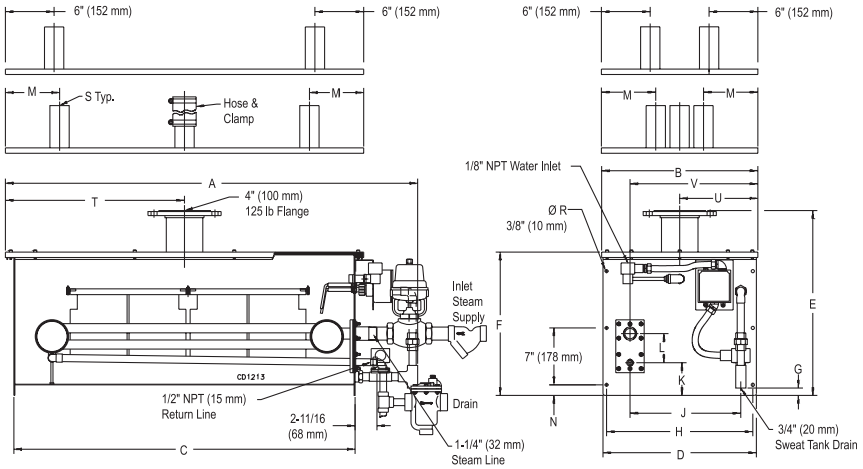

Figure 103-2. Model CS-14

Alternate Lids:
CS-14 with 2 or 4 Steam Outlets

Model CS-14 Shown with Single 4" (100 mm) Flanged Steam Outlet

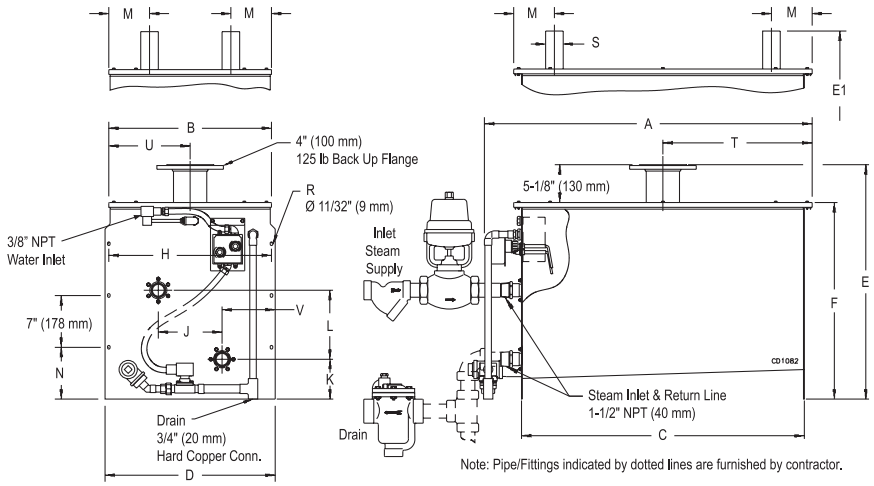

Figure 103-3. Model CS-15

Alternate Lid:
CS-15 with 4 Steam Outlets

Model CS-15 Shown with Two 4" (100 mm) Flanged Steam Outlets

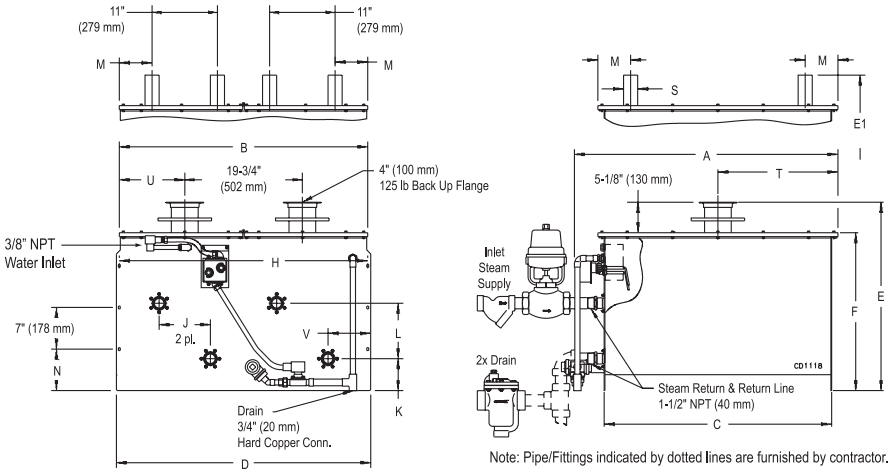

Series CS-10 Options and How to Order

List of Options

- Control Humidistat
- High Limit Humidistat
- Air Proving Switch
- Teflon Coated Heat Exchanger (Stainless Steel Heat Exchangers only)
- Phenolic Coated Heat Exchanger for DI Water
- 10 Foot Flexible Rubber Hose (CS-11 only)
- Insulation
- Support Legs
- 4" Steam Header with four 2" connections for additional separation and simplified transition to multiple dispersion tubes
  - Lid Options

    CS-13 (2) 2" connections
    (3) 2" connections (suggested for greater than 180 lb/hr units)
    (1) 4" flanged connection

    CS-14 (1) 4" flanged connection
    (4) 2" connections
    (2) 2" connections (less than 180 lb/hr only)

    CS-15 (2) 4" flanged connections
    (4) 2" connections (less than 360 lb/hr only)

How to Order

1. Determine model from Table 104-1 below based on capacity and control options:
2. Size of humidifier: **11, 12, 13, 14 or 15.**
   Example of complete model: **CS-11SF**
3. Specify control valve operator type:
   (Mode of control).
   Example: For a pneumatic valve on
   Model CS-11 : ACV-02-AM
4. Length of dispersion tube(s)
   (See Table 101-3, Page 101)
5. Specify steam pressure and capacity required.
6. Specify control voltage to control panel (if applicable)
7. For electric valves only: Specify control valve supply voltage and desired input signal.

Figure 104-1. Series CS-10 Dispersion Tube and Series CS-10 Dispersion Tube with Drain Tube

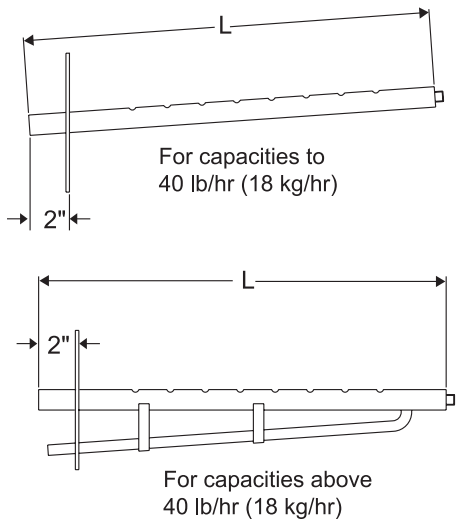

Table 104-1. Model Determination Table

Model No.	Coil Material	Level Control	Drain Valve	Control Panel
CS-11SF	Stainless Steel	Float	Optional	N/A
CS-12SF				
CS-13SF				
CS-11CB	Electroless Nickel Plated Copper	Conductance Probe	Standard	Advanced
CS-13CB				
CS-14CB				
CS-15CB				
CS-11SB	Stainless Steel			
CS-12SB				
CS-13SB				
CS-14SB				
CS-15SB				
CS-11DI	Stainless Steel with P403 Coating	Float	N/A	N/A
CS-12DI				
CS-13DI				
CS-14DI				
CS-15DI				

Table 104-2. Series CS-10 Control Valve Selection

Humidifier Model No.	Control Valve Model No.
CS-11	ACV-02
CS-12	ACV-03
CS-13	ACV-03 ACV-04
CS-14	ACV-06
CS-15	HWELL-2

Table 104-3. Series CS-10 Standard Operator Types Available

Pneumatic Modulating
AM = Armstrong C-1801 (ACV-02 & -03 only) **HAM** = Honeywell MP953D and F
Electric Modulating
HEM = Honeywell M9182A (0-135 ohm) **HEM** = Honeywell M9182A w/A-9847 4-20 mA **HEM** = Honeywell M9182A 2-10 Vdc **BLEM** = Belimo AF24SR **BNVEM** = Belimo NVF24 (ACV-02, -03 &-04 only)

*Designs, materials, weights and performance ratings are approximate and subject to change without notice. Visit **armstrong**international.com for up-to-date information.*

Armstrong International - NA **armstrong**international.com
Armstrong International - EU **armstrong**international.eu
Armstrong International - China **armstrong**international.cn
Armstrong International - India **armstrong**international.in
Armstrong International, Korea armintl.co.kr

NEXT